REASSEMBLY

1. **INSPECT OUTPUT SHAFT (See page MX-80)**
2. **INSPECT 2ND GEAR (See page MX-80)**
3. **INSPECT 1ST GEAR (See page MX-80)**
4. **INSPECT 1ST GEAR THRUST WASHER (See page MX-81)**
5. **INSPECT SYNCHRONIZER RING SET NO. 2 (See page MX-81)**
6. **INSPECT SYNCHRONIZER RING NO.1 (See page MX-81)**
7. **INSPECT REVERSE GEAR (See page MX-82)**
8. **INSPECT TRANSMISSION CLUTCH HUB NO. 1 (See page MX-82)**
9. **INSTALL REVERSE GEAR**
   (a) Coat the reverse gear with gear oil, install it to the transmission clutch hub No. 1.
   NOTICE:
   Be sure to set the reverse gear and transmission clutch hub No. 1 in incorrect orientation.
   (b) Using a screwdriver, install the 3 synchromesh shifting key springs and 3 synchromesh shifting keys.

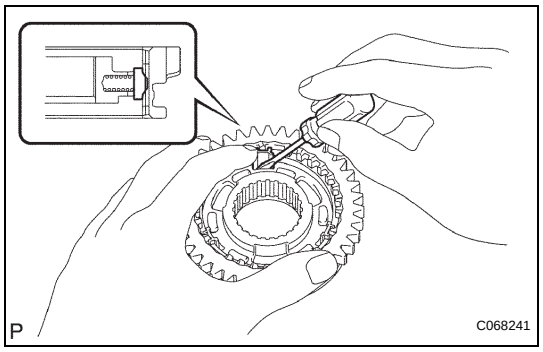

10. **INSTALL OUTPUT SHAFT FRONT BEARING**
    (a) Using SST and a press, install the new output shaft front bearing (inner race) to the output shaft.
    SST 09223-50010

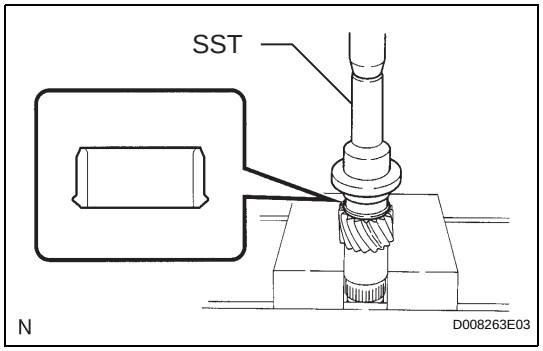

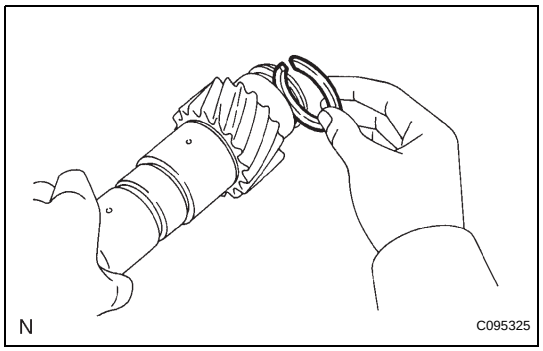

(b) Select a snap ring from the table below that will make the thrust clearance of the output shaft front bearing (inner race) below 0.1 mm (0.004 in.).
Snap ring thickness:

Part No.	Thickness: mm (in.)	Mark
90520-30032	1.85 to 1.90 (0.0728 to 0.0748)	7
90520-30033	1.90 to 1.95 (0.0748 to 0.0768)	8
90520-30002	1.95 to 2.00 (0.0768 to 0.0787)	1
90520-30003	2.00 to 2.05 (0.0787 to 0.0807)	2
90520-30004	2.05 to 2.10 (0.0807 to 0.0827)	3

cardiagn.com

Part No.	Thickness: mm (in.)	Mark
90520-30005	2.10 to 2.15 (0.0827 to 0.0846)	4
90520-30006	2.15 to 2.20 (0.0846 to 0.0866)	5
90520-30007	2.20 to 2.25 (0.0866 to 0.0886)	6

(c) Using a brass bar and a hammer, tap in the snap ring.
NOTICE:
Take care not to damage the journal surface of the output shaft.

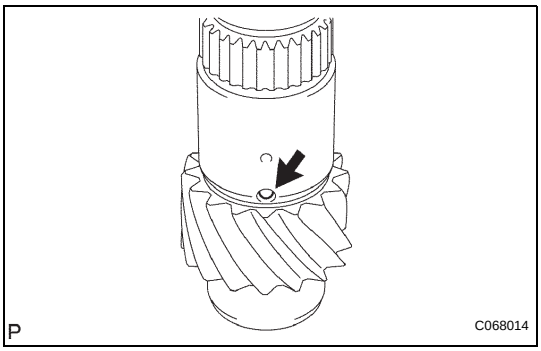

11. INSTALL 1ST GEAR THRUST WASHER PIN OR BALL

(a) Coat the 1st gear thrust washer pin or ball with MP grease, install it to the output shaft.

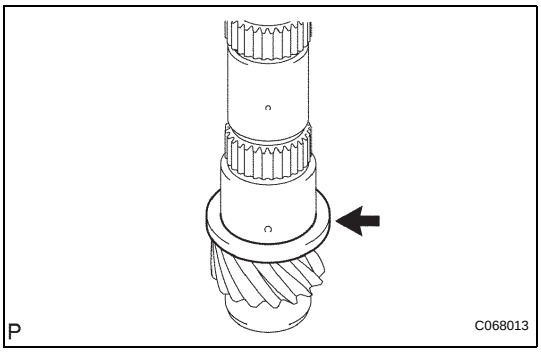

12. INSTALL 1ST GEAR THRUST WASHER

(a) Coat the 1st gear thrust washer with gear oil, install it to the output shaft.

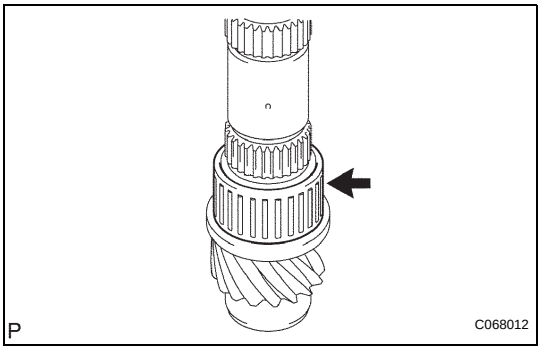

13. INSTALL 1ST GEAR NEEDLE ROLLER BEARING

(a) Coat the 1st gear needle roller bearing with gear oil, install it to the output shaft.

cardiagn.com

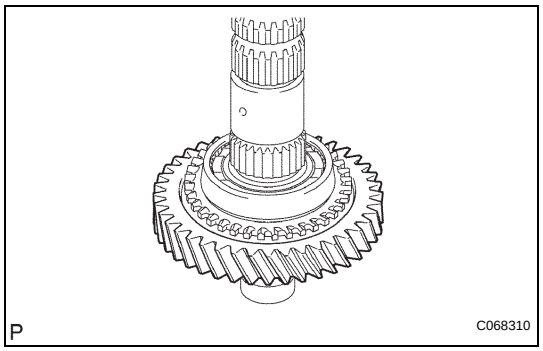

14. INSTALL 1ST GEAR

(a) Coat the 1st gear with gear oil, install it to the output shaft.

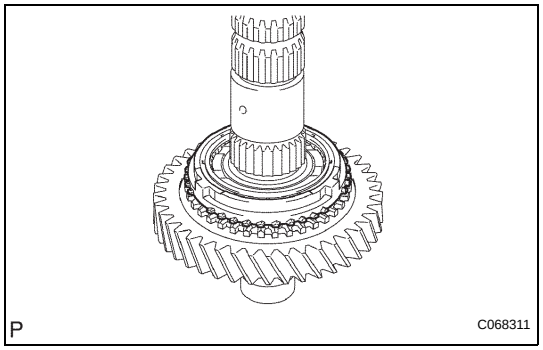

15. INSTALL SYNCHRONIZER RING NO. 1

(a) Coat the synchronizer ring No. 1 with gear oil, install it to the 1st gear.

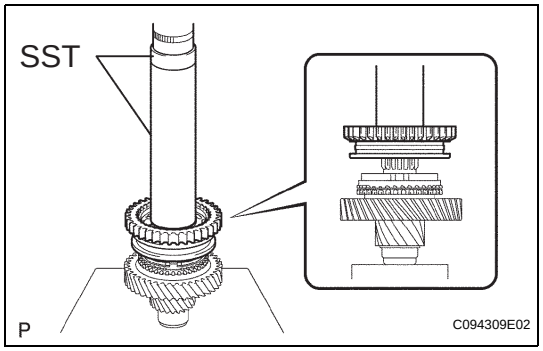

16. INSTALL TRANSMISSION CLUTCH HUB NO. 1

(a) Using SST and a press, install the transmission clutch hub No. 1 to the output shaft.
SST 09316-60011 (09316-00031)
NOTICE:
The 1st gear can be turned.

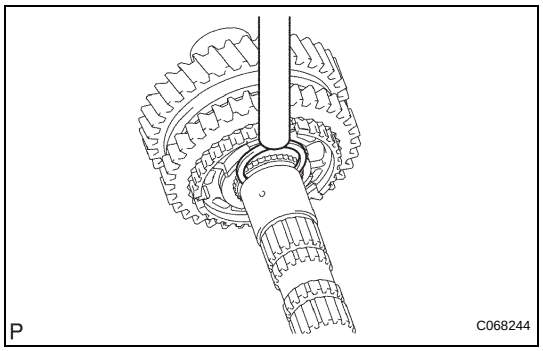

(b) Select a snap ring from the table below that will make the thrust clearance of the transmission clutch hub No. 1 below 0.1 mm (0.0004 in.)
Snap ring thickness:

Part No.	Thickness: mm (in.)	Mark
90520-29018	2.50 (0.0984)	A
90520-29019	2.56 (0.1008)	B
90520-29020	2.62 (0.1031)	C
90520-29021	2.68 (0.1055)	D
90520-29022	2.74 (0.1079)	E
90520-29023	2.80 (0.1102)	F

(c) Using a brass bar and a hammer, install the snap ring to the output shaft.
NOTICE:
Take care not to damage the journal surface of the output shaft.

cardiagn.com

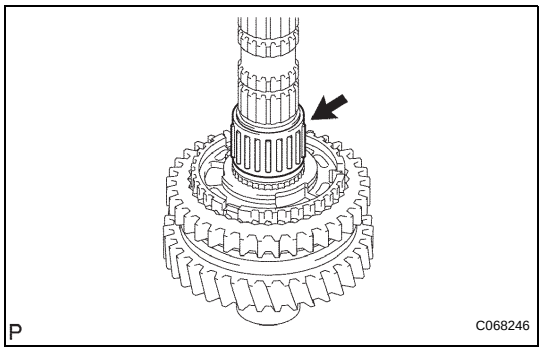

17. INSTALL 2ND GEAR NEEDLE ROLLER BEARING

(a) Coat the 2nd gear needle roller bearing and 2nd gear bearing spacer with gear oil, install them to the output shaft.

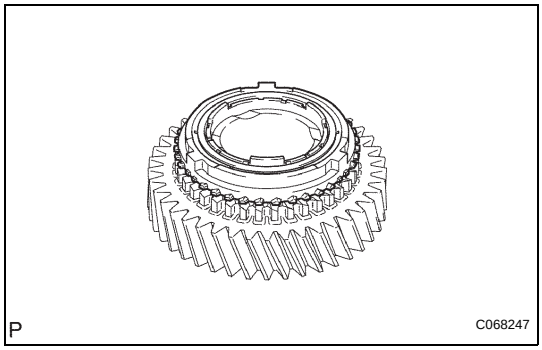

18. INSTALL SYNCHRONIZER RING SET NO. 2

(a) Coat the synchronizer ring set No. 2 with gear oil, install it to the 2nd gear.

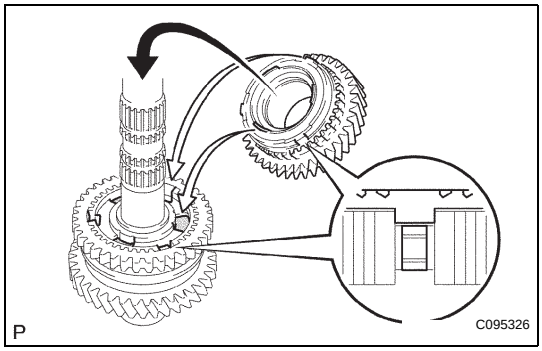

19. INSTALL 2ND GEAR

(a) Coat the 2nd gear with gear oil, install it to the output shaft.

NOTICE:

Fit the synchronizer inner ring claws into the slots in the transmission clutch hub No. 1.

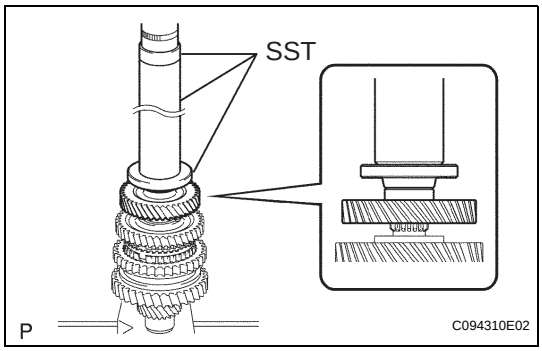

20. INSTALL 3RD DRIVEN GEAR

(a) Using SST and a press, install the 3rd driven gear to the output shaft.

SST 09309-36100 (09309-03610), 09608-00071, 09950-60010 (09951-00450)

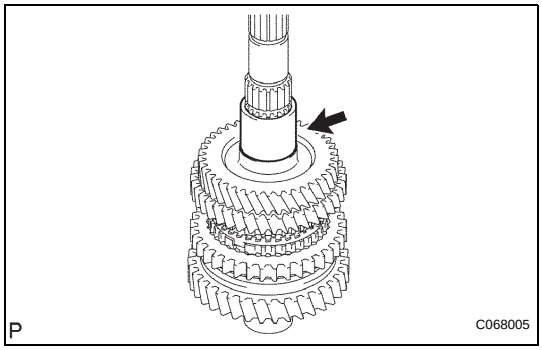

21. INSTALL OUTPUT GEAR SPACER

(a) Install the output gear spacer to the output shaft.

cardiagn.com

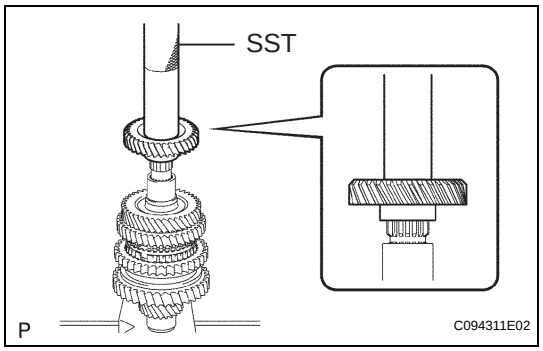

22. INSTALL 4TH DRIVEN GEAR

(a) Using SST and a press, install 4th driven gear to the output shaft.
SST 09612-22011

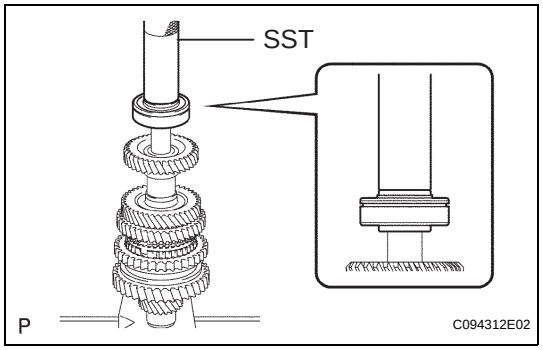

23. INSTALL OUTPUT SHAFT REAR BEARING

(a) Using SST and a press, install output shaft rear bearing to the output shaft.
SST 09612-22011

24. INSPECT 2ND GEAR RADIAL CLEARANCE (See page MX-79)

25. INSPECT 1ST GEAR RADIAL CLEARANCE (See page MX-79)

26. INSPECT 2ND GEAR THRUST CLEARANCE (See page MX-79)

27. INSPECT 1ST GEAR THRUST CLEARANCE (See page MX-79)

cardiagn.com